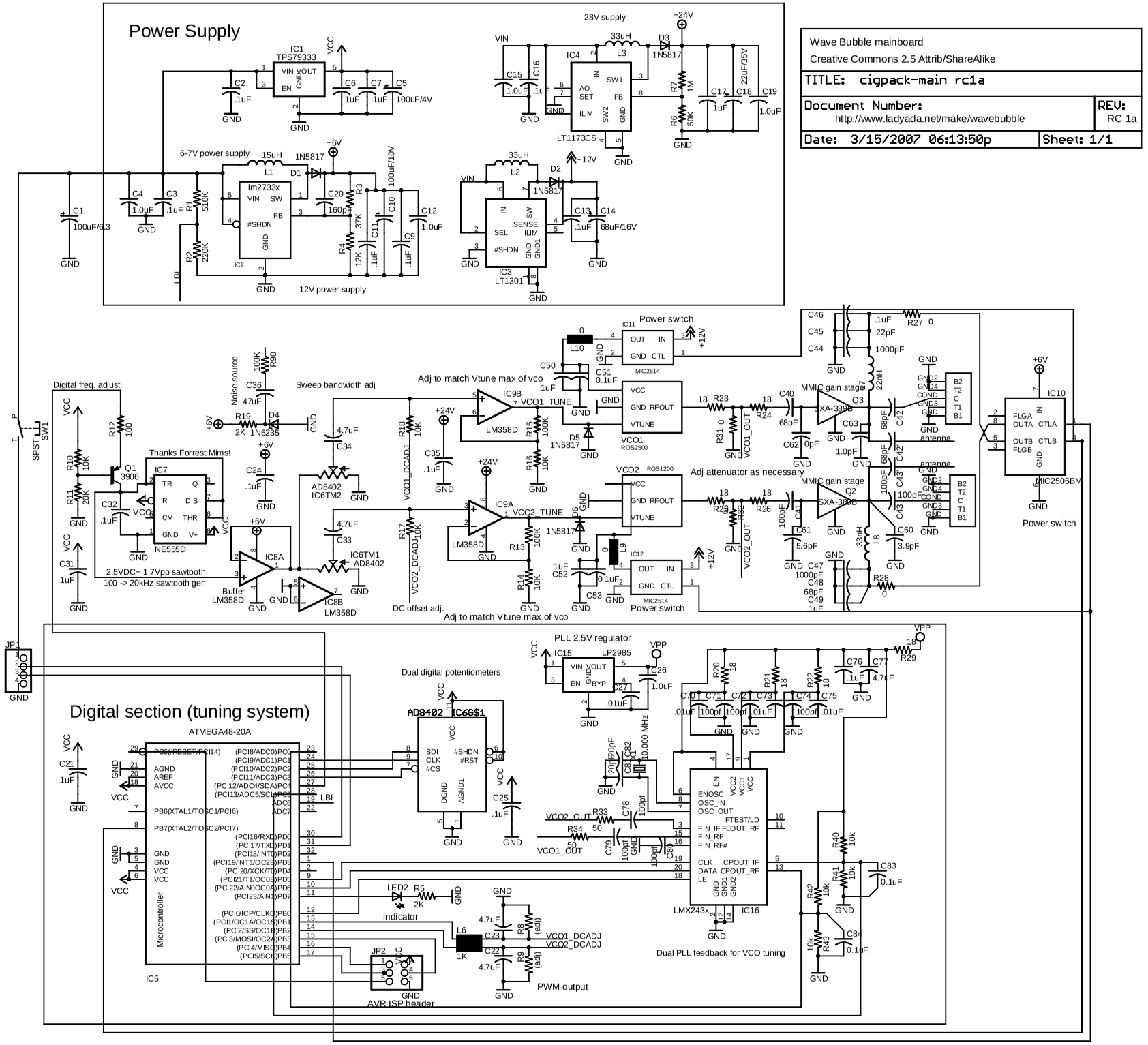
Power Supply
IC1 TPS79333
28V supply
IC4 LT1173CS
6-7V power supply
IC2 lm2733x
12V power supply
IC3 LT1301
Wave Bubble mainboard
Creative Commons 2.5 Attrib/ShareAlike
TITLE: cigpack-main rc1a
Document Number:
http://www.ladyada.net/make/wavebubble
REV: RC 1a
Date: 3/15/2007 06:13:50p
Sheet: 1/1
Digital freq. adjust
Thanks Forrest Mims!
NE555D
2.5VDC+ 1.7Vpp sawtooth
100 -> 20kHz sawtooth gen
Noise source
Sweep bandwidth adj
Adj to match Vtune max of vco
Power switch
MIC2514
VCO1 ROS2500
VCO2 ROS1200
Adj attenuator as necessary
MMIC gain stage
SXA-389B
antenna
IC10 MIC2506BM
DC offset adj.
Digital section (tuning system)
ATMEGA48-20A
Microcontroller
IC5
Dual digital potentiometers
AD8402 IC6G$1
PLL 2.5V regulator
IC15 LP2985
IC16 LMX243x
Dual PLL feedback for VCO tuning
indicator
AVR ISP header
PWM output